SRAD20

20W Adjustable Step-Up Switching Regulator

Adjustable output from V_{IN} to $200V_{OUT}$

Key Features

- Efficiency up to 88%
- Wide input range (5–18V)
- Input under/overvoltage protection
- Output overvoltage protection
- 150kHz constant frequency
- 50W/in³ power density
- Six-sided shielding
- Thermal protection
- External synchronization

Beta Dyne is protected under various patents, including but not limited to U.S. Patent numbers: 5,777,519; 6,188,276; 6,262,901; 6,452,818; 6,473,3171.

Applications

Battery Chargers/Backup

External Modems

Programmable Power Supply

xDSL Power Supply

Telecom Hardware

LAN and Network Systems

Point of Sale (POS) Systems

Functional Description

The SRAD20 is a family of 20W constant frequency, current mode step-up switching regulators with excellent line and load regulation that accepts an input voltage from $5V_{IN}$ to $18V_{IN}$ and provides an adjustable output voltage from V_{IN} to $200V_{OUT}$. High switching frequency and SMD technology makes achieving high power density, low cost and high reliability possible. The converters require a low impedance power source or minimum 1000µF input capacitor for proper operation. The converters come in a 2×1×0.39-inch package size. NOTE: Please see Application Notes SR-003 and SR-004.

NOTE: These converters DO NOT feature short circuit protection, you must use an external fuse to provide short circuit protection.

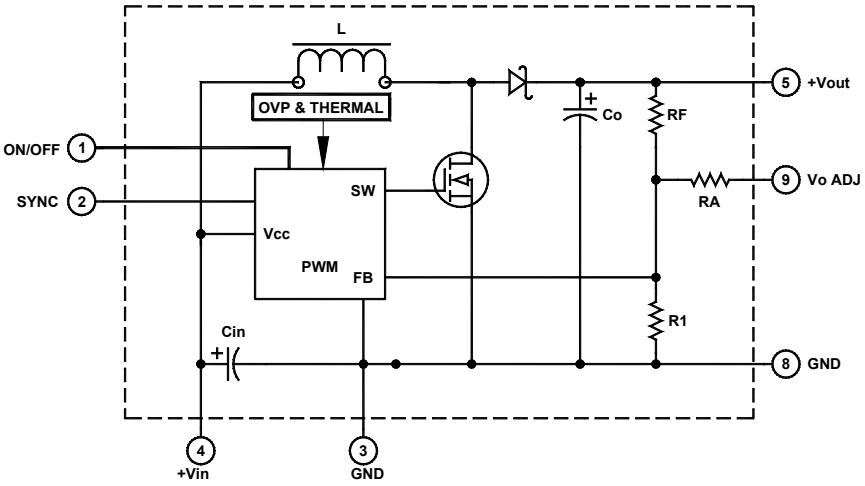

Typical Block Diagram

Electrical Specifications

Unless otherwise specified, all parameters are given under typical +25°C with nominal input voltage and under full output load conditions.

INPUT SPECIFICATIONS

PARAMETER	CONDITION / NOTE	MIN	TYP	MAX	UNIT
Input Voltage Range	See Model Selection Guide				
Input Current	NL, See Model Selection Guide				mA
Input Reflected Ripple	With 1000µF, See Figure 4		20		mA_{PP}
Turn On Delay	Including Soft Start, See Figure 3		5	8	mS
Overvoltage Lockout, 5V		9	10		Vdc

OUTPUT SPECIFICATIONS

PARAMETER	CONDITION / NOTE	MIN	TYP	MAX	UNIT
Output Voltage	See Model Selection Guide	V_{IN}		200	Vdc
Output Voltage Accuracy			0.5	1	%
Output Current	See Figure 7	100		1000	mA
Line Regulation			±1	±2	% of V_{OUT}

GENERAL SPECIFICATIONS

PARAMETER	CONDITION / NOTE	MIN	TYP	MAX	UNIT
Efficiency	See Model Selection Guide				
Switching Frequency	Fixed	150		170	kHz

ENVIRONMENTAL SPECIFICATIONS

PARAMETER	CONDITION / NOTE	MIN	TYP	MAX	UNIT

PHYSICAL CHARACTERISTICS

PARAMETER	CONDITION / NOTE	MIN	TYP	MAX	UNIT

[1] The off state output voltage is equal to V_{IN} minus 1 diode drop.
[2] After thermal turn off, $V_{OUT} \cong V_{IN}$ - 0.7V.

[3] Measured with 1000µF input capacitor. See C_{IN} in Figure 6.
[4] For output power of 16W, this model will operate down to $5V_{IN}$.

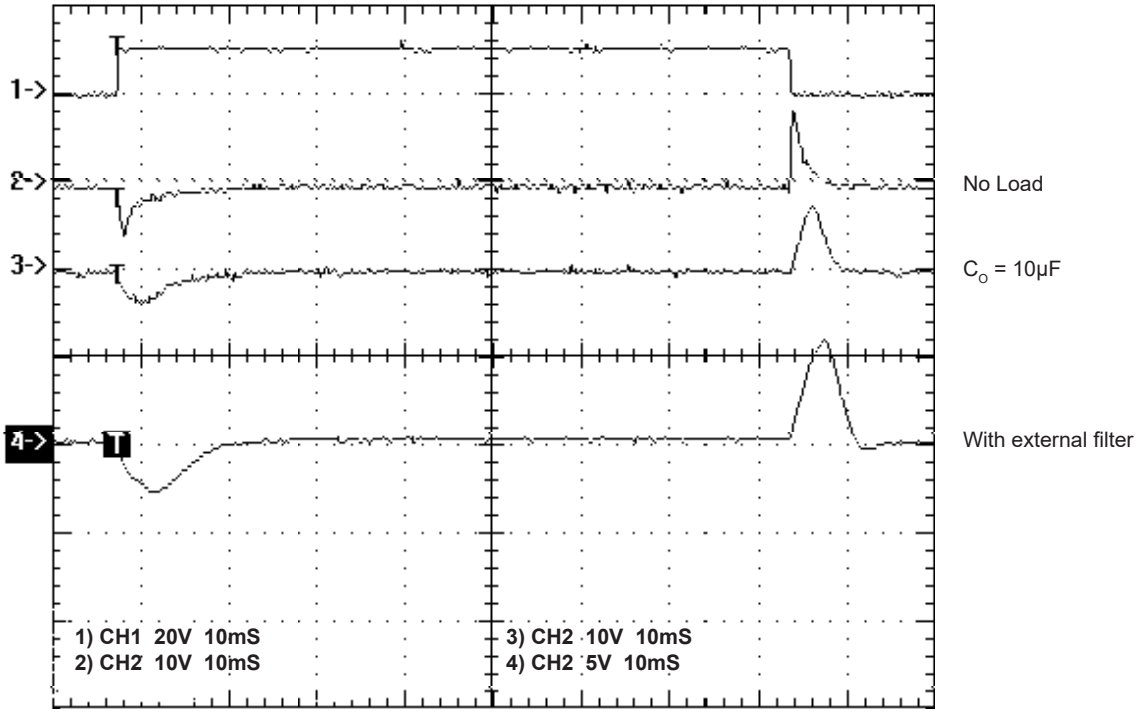

FIGURE 1. Transient response

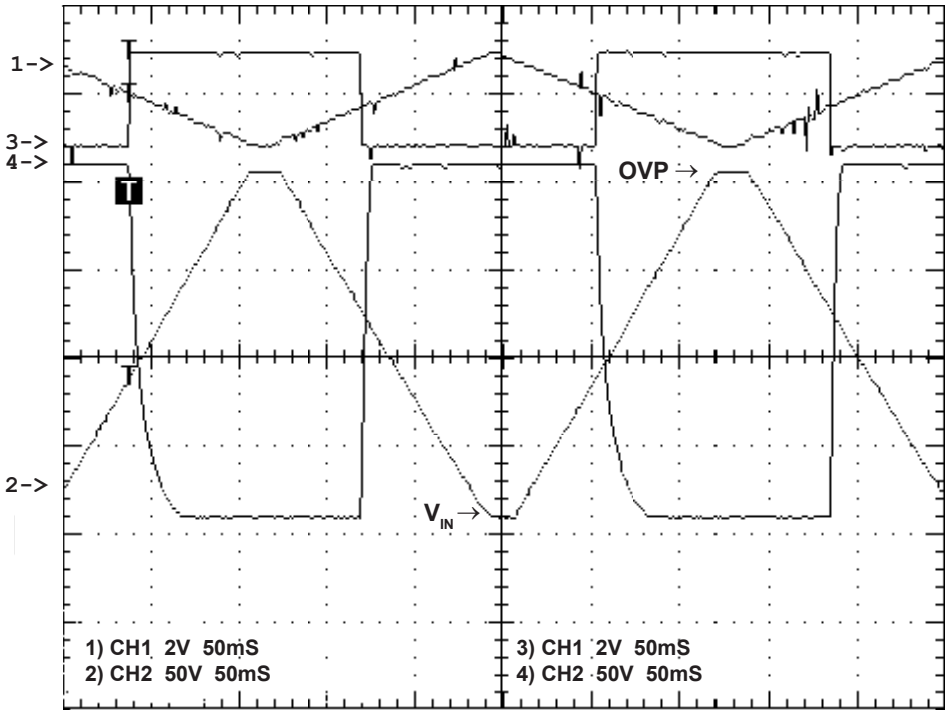

Figure 2 shows the linearity of the converter. The converter can be adjusted from V_{IN} to +200Vdc. Also note the negative-going edge of waveform #4 is the R_L*C_O (R_L = 2K, C_O = 1µF External + 3µF Internal) time constant. During this time, the PWM is Off.

FIGURE 2. V_{IN} vs. V_{OUT} Linearity and Output voltage protection

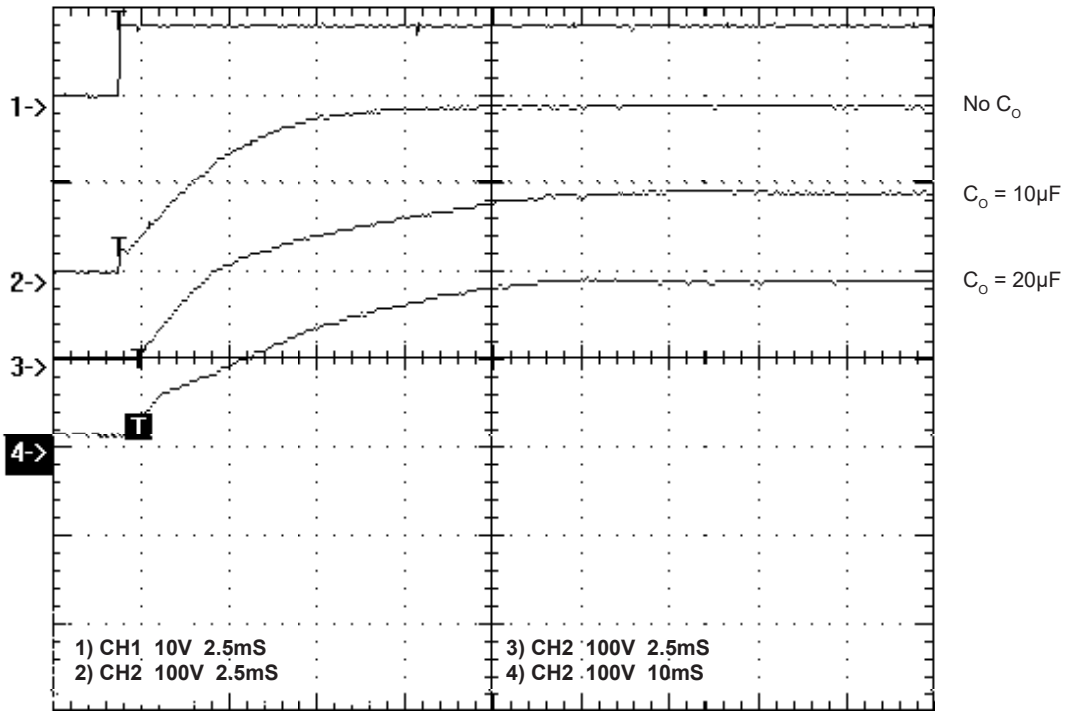

FIGURE 3. Turn on delay with soft start
(No additional C_O, C_O = 10µF, C_O = 20µF)

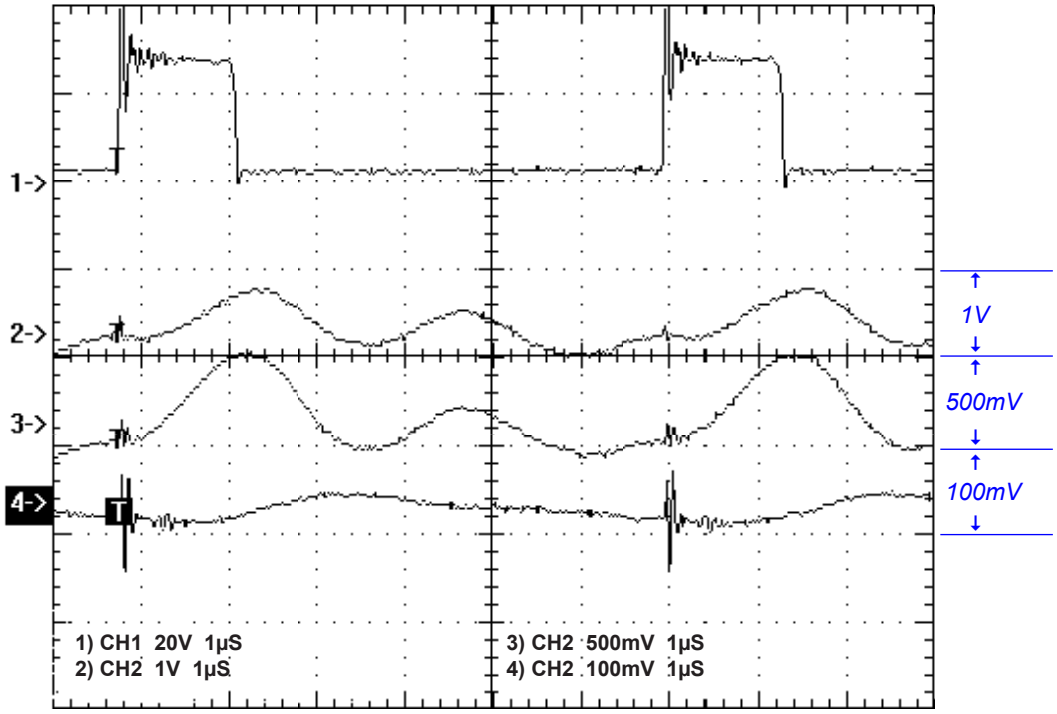

FIGURE 4. Output ripple of SRAD20S200/5

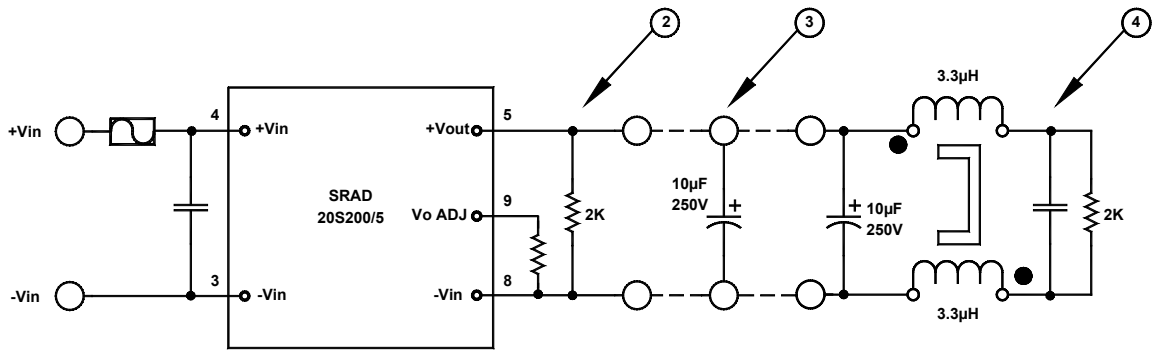

FIGURE 5. Circuit components used to obtain waveform in Figure 4 (See Figure 4)

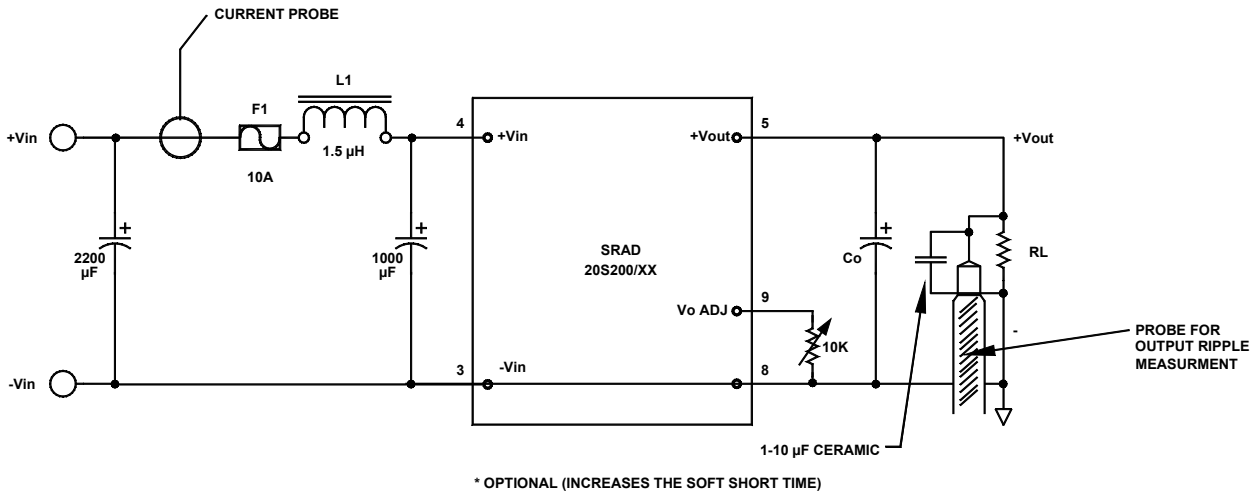

FIGURE 6. Connection diagram for input reflected ripple and output voltage ripple measurements

V_{IN}	F1

Adjusting V_O by R_X in KΩ: $V_O \cong 2\left(1 + \frac{511}{4.99+R_X}\right)$ $R_X = \frac{511}{(V_O/2) - 1} - 4.99$

Adjusting V_O by an external voltage source: $V_O \cong 206.8 - 102.4 * V_{IN}$ or $V_{IN} = (206.8 - V_O)/102.4$

V_o	Calculated R_x in KW	Nearest STD 1% in KW
20	51.78	52.30
40	21.90	22.10
60	12.63	12.70

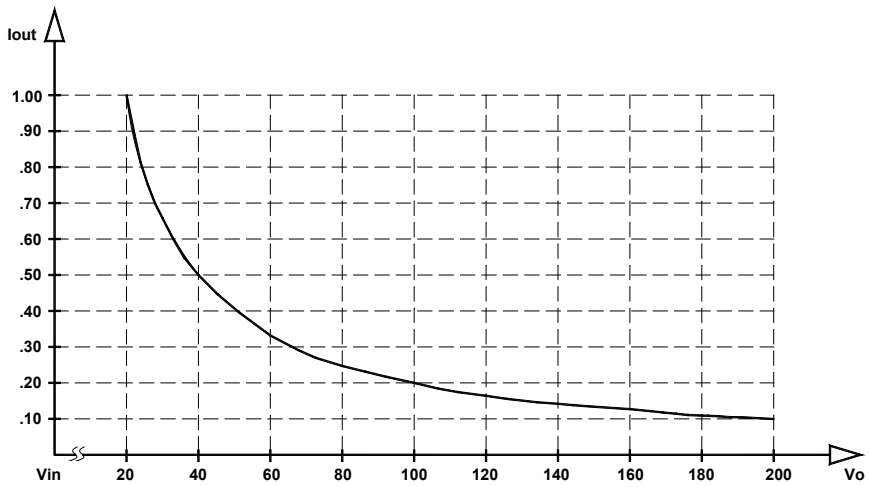

FIGURE 7. I_{OUT} vs. V_{OUT} for P_O Max ≤ 20W

MECHANICAL SPECIFICATIONS

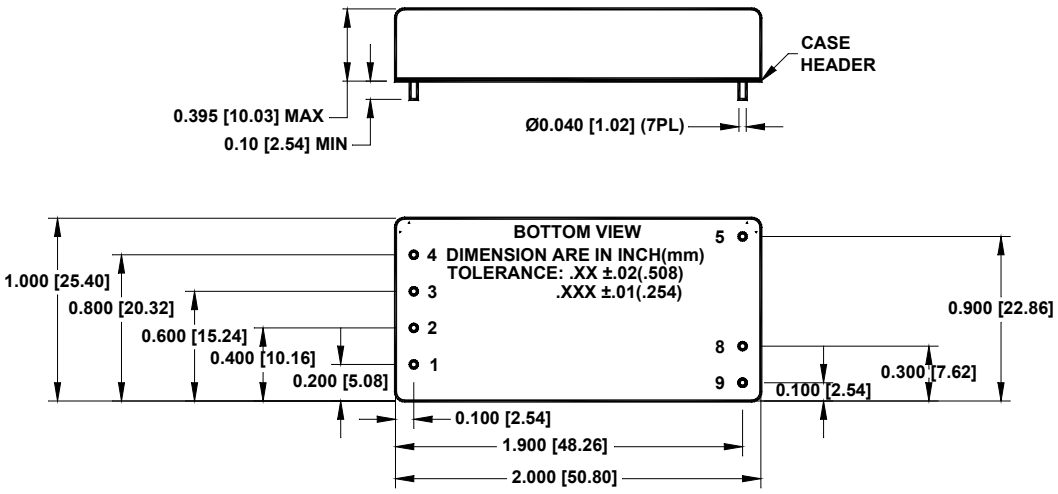

Pin	Function
1	ON/OFF
2	SYNC
3	$-V_{IN}$ (INPUT GND)*
4	$+V_{IN}$
5	$+V_{OUT}$
6	No Pin
7	No Pin
8	GND*
9	V_O REF

* Input Ground (Pin 3) and Output Ground (Pin 8) are internally connected