EB30006

30W Single DC/DC Converter

36-72V_{in} 5V_{out} @ 6 A

Key Features

- Efficiency up to 90%
- Six-sided shielding
- Output synchronous rectification
- 2:1 input voltage range
- Input-to-output isolation
- Soft start
- External synchronization
- Short circuit protection
- Thermal protection
- Industry standard pinout
- Output Voltage Adjust

Beta Dyne is protected under various patents, including but not limited to U.S. Patent numbers: 5,777,519; 6,188,276; 6,262,901; 6,452,818; 6,473,3171.

Applications

Electronic Data Processing (EDP)

Instrumentation/Industrial/Medical

Communications

Computers

Fiber Optics

Functional Description

The EB30006 is an isolated 30W single output DC/DC converter that accepts 36 to 72V_{IN} and provides 5V_{OUT}@6A. It is designed to synchronize with a 50% duty cycle, AC-coupled, TTL sync input. The push-pull topology and output synchronous rectification allow for continuous operation even at low input voltage with maximum efficiency. A special designed case provides six-sided shielding with external synchronization minimizes EMI,RFI and protection features allow the converter to operate in harsh environments.

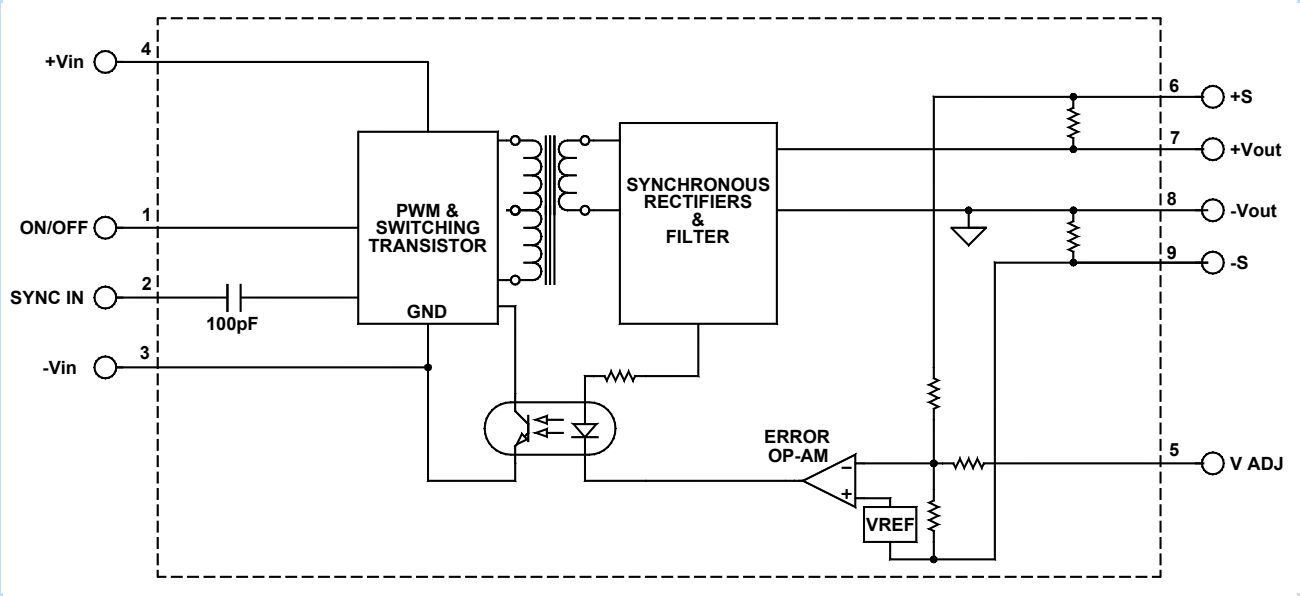

Typical Block Diagram

Electrical Specifications

INPUT SPECIFICATIONS

PARAMETER	CONDITION / NOTE	MIN	TYP	MAX	UNIT
Input Voltage Range		36	48	72	Vdc
Input Startup Voltage, $48V_{IN}$		35			Vdc
Undervoltage Shutdown, $48V_{IN}$		32			Vdc
Input Filter	Capacitor				
No Load Input Current			40		mA
Input Current			695		mA
Input Surge Current (20µS Spike)				10	A
Short Circuit Current Limit			125	150	% I_{IN} Max
Off State Current			150		µA
Remote ON/OFF Control					
Supply ON	Pin 3 Open (Open circuit voltage: 10V Max.)				
Supply OFF		0		0.6	Vdc
Lofic Input Reference	TO -VIN				
Logic Compatibility	TTL Open Collector or CMOS Open Drain				

OUTPUT SPECIFICATIONS

PARAMETER	CONDITION / NOTE	MIN	TYP	MAX	UNIT
Voltage and Current Ratings			5		
Output Voltage Accuracy			1	2	%
Output Voltage Adjustment			±5	8	%
Output Current			6.0		A
Ripple & Noise			1	2	$\%V_{PP}$ of V_{OUT}
Line Regulation	Minimum V_{IN} to maximum V_{IN}		±0.04	±0.1	%
Load Regulation	NL to FL		0.05	0.1	%
Temperature Coefficient @ FL			0.02		%/°C
Transient Response Time			25	100	µS
Short Circuit Protection	By input current limiting				
Turn On Delay with Soft Start			30	40	mS
Output Overvoltage Protection	None				

GENERAL SPECIFICATIONS

PARAMETER	CONDITION / NOTE	MIN	TYP	MAX	UNIT
Efficiency (at full power)			90		%
Isolation Voltage (1 min.), Input to Output			1500		Vdc
Isolation Resistance			10^9		Ω
Isolation Capacitance			300		pF
Switching Frequency (F c)		120	180	200	kHz
External Sync Frequency (F e)		320	380	420	kHz

ENVIRONMENTAL SPECIFICATIONS

PARAMETER	CONDITION / NOTE	MIN	TYP	MAX	UNIT
Operating Temperature Range (Ambient)		-40		+85	°C
Storage Temperature Range		-55		+125	°C
Shielding Connection	+Vin				
MTBF	per MIL-HNBK-217F (Ground benign, +25°C)		1.1×10^6		hours

PHYSICAL CHARACTERISTICS

PARAMETER	CONDITION / NOTE	MIN	TYP	MAX	UNIT
Dimensions (L×W×H)	2.00×1.00×0.450 in. (50.80×25.40×11.43mm)				
Weight	1.3 oz. (37g)				

[1] When the converter enters thermal protection mode, its duty cycle is reduced momentarilly and will resume after its internal temperature (PWM) drops a few degress (°C). The conveter's output behaves similar to a hiccup short circuit mode.
[2] See Application Note DC-004: Thermal Considerations for DC/DC Converters.

MECHANICAL SPECIFICATIONS

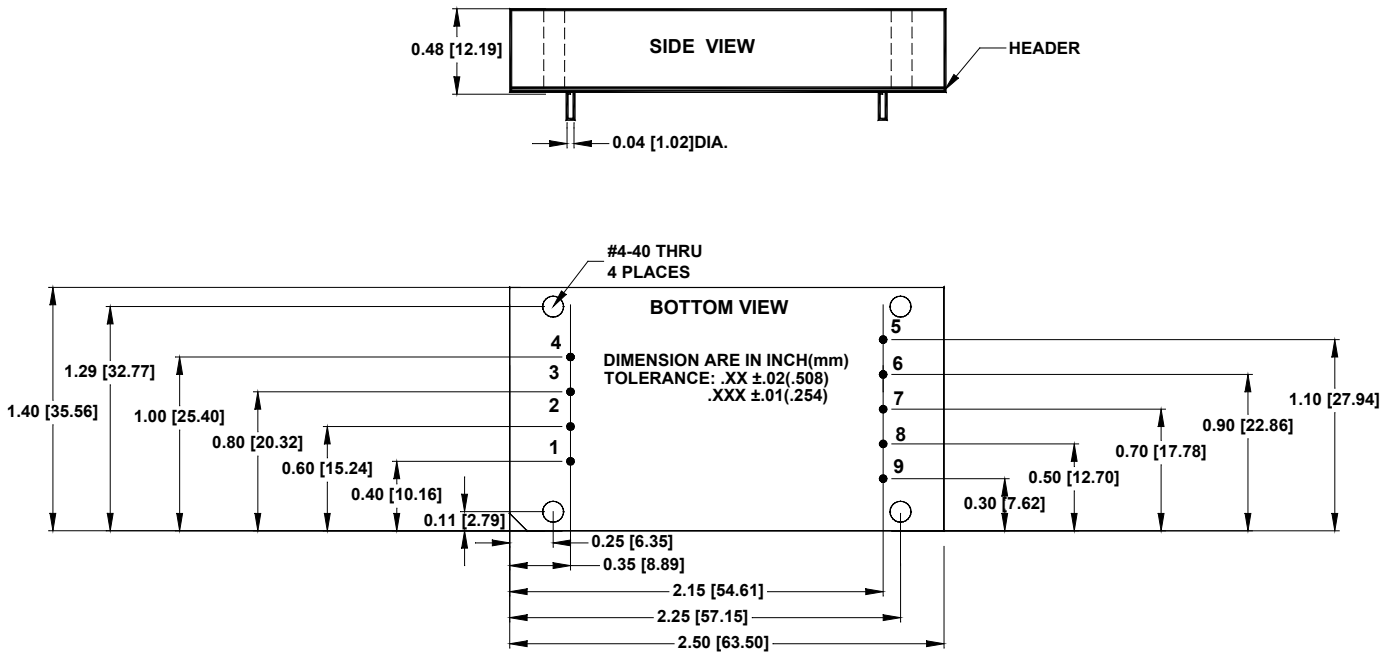

Pin	Function
INPUTS	
1	ON/OFF
2	SYNC IN*
3	$-V_{IN}$
4	$+V_{IN}$
OUTPUTS	
5	V_{ADJ}
6	+S
7	$+V_{OUT}$
8	$-V_{OUT}$
9	-S